Transporter the Rescue (16-2008)

FUSE LIST

Power Supply Board D-12246		
F1	**100V Display Power Input**	**3/8A, 250V, SB**
F2	**+100V Display Power Output**	**1/8A, 250V, SB**
F3	**-100V Display Power Output**	**1/8A, 250V, SB**
F4, F5	**5V & 12V Logic Power Input**	**7A, 250V, SB**
Aux. Power Driver Board D-12247		
F1	**+25V Special Solenoids**	**2-1/2A, 250V, SB**
F2A	**+25V A-Line Solenoids**	**2-1/2A, 250V, SB**
F2C	**+25V C-Line Solenoids**	**5A, 250V, SB**
F3	**+25V Controlled Solenoids**	**2-1/2A, 250V, SB**
F4	**+50V Solenoids**	**2-1/2A, 250V, SB**
F5	**+50V Solenoids**	**2A, 250V, SB**
F6	**Lower Flippers**	**2A, 250V, SB**
F7	**50Vac Input**	**4A, 250V, SB**
F8	**25Vac Input**	**7A, 250V, SB**
Interconnect Board D-12313-50007		
F1	**General Illumination (Brown)**	**5A, 250V, SB**
F2	**General Illumination (Yellow)**	**5A, 250V, SB**
F3	**General Illumination (Green)**	**5A, 250V, SB**
F4	**General Illumination (Violet)**	**5A, 250V, SB**
BackBox Fuse		
F1	**+18V Controlled Lamps**	**8A, 250V, SB**
LINE FILTER		
Foreign		**4A, 250V, SB**
Domestic		**8A, 250V, SB**

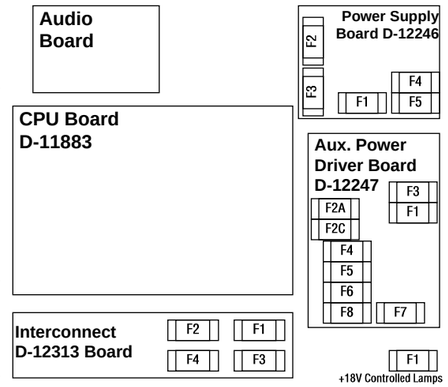

SOLENOID/FLASHER TABLE

Sol No.	Function	Solenoid Type	Wire [1] Color	Connections: CPU Brd	Connections: Playfield / Cabinet	Driver Transtr	Solenoid Part Number Flashlamp Type: Playfield	Solenoid Part Number Flashlamp Type: Insert
01A[3]	Outhole	Switched	Vio-Brn	1P11-1	5J1-9: 5J4-9 (A)	Q33	AE-23-800	
01C[3]	Playfield 2X flasher	Switched	Blk-Brn	(Gry-Brn)	5J5-9 (C)		#906	
02A[3]	Shooter lane feeder	Switched	Vio-Red	1P11-3	5J1-7: 5J4-8 (A)	Q25	AE-23-800	
02C[3]	Bridge flasher	Switched	Blk-Red	(Gry-Red)	5J5-8 (C)		#906	
03A[3]	Left drop target bank	Switched	Vio-Orn	1P11-4	5J1-6: 5J4-7 (A)	Q32	AE-23-800	
03C[3]	Top left flashers	Switched	Blk-Orn	(Gry-Orn)	5J5-7 (C)		#906 (2)	
04A[3]	Right drop target bank	Switched	Vio-Yel	1P11-5	5J1-5: 5J4-6 (A)	Q24	AE-23-800	
04C[3]	Jet bumper flashers	Switched	Blk-Yel	(Gry-Yel)	5J5-5 (C)		#906 (2)	
05A[3]	Left (Orion) lockup	Switched	Vio-Grn	1P11-6	5J1-4: 5J4-5 (A)	Q31	AE-23-800	
05C[3]	Ball lock flashers	Switched	Blk-Grn	(Gry-Grn)	5J5-4 (C)		#906	#89
06A[3]	Ball popper	Switched	Vio-Blu	1P11-7	5J1-3: 5J4-4 (A)	Q23	AE-26-1200	
06C[3]	Single standup flasher	Switched	Blk-Blu	(Gry-Blu)	5J5-3 (C)		#906	
07A[3]	Knocker	Switched	Vio-Blk	1P11-8	5J1-2: 5J4-2 (A)	Q30	AE-23-800	
07C[3]	Ball popper flashers	Switched	Blk-Vio	(Gry-Vio)	5J5-2 (C)		#906	#89
08A[3]	Right (Orion) lockup	Switched	Vio-Gry	1P11-9	5J1-1: 5J4-1 (A)	Q22	AE-23-800	
08C[3]	Playfield 3X flasher	Switched	Blk-Gry	(Gry-Blk)	5J5-1 (C)		#906	
09	Playfield G.I. relay	Controlled	Brn-Blk	1P12-1	5J2-9: 5J6-9: 2J4-3	Q17	5580-09555-01 [4a]	
10	Top flipper gate	Controlled	Brn-Red	1P12-2	5J2-8: 5J6-8: 2J4-5	Q9	SM2-35-4000-DC	
11	Turn 1 flasher	Controlled	Brn-Orn	1P12-4	5J2-6: 5J6-7: 2J4-6	Q16	#906	#89
12	A/C select relay	Controlled	Brn-Yel	1P12-5	5J2-5	Q8	5580-09555-01 [5]	
13	Not used	Controlled	Brn-Grn	1P12-6	5J2-4: 5J6-5	Q15		
14	Left outlane kicker	Controlled	Brn-Blu	1P12-7	5J2-3: 5J6-3	Q7	AE-23-800	
15	Turn 2 flasher	Controlled	Brn-Vio	1P12-8	5J2-2: 5J6-2	Q14	#906	#89
16	Turn 3 flasher	Controlled	Brn-Gry	1P12-9	5J2-1: 5J6-1	Q6	#906	#89
17	Left jet bumper	Special #1	Blu-Brn	1P19-7	5J3-7: 5J7-7	Q75	AE-23-800	
18	Left slingshot	Special #2	Blu-Red	1P19-4	5J3-6: 5J7-6	Q71	AE-26-1500	
19	Right jet bumper	Special #3	Blu-Orn	1P19-3	5J3-3: 5J7-3	Q73	AE-23-800	
20	Right slingshot	Special #4	Blu-Yel	1P19-6	5J3-4: 5J7-5	Q69	AE-26-1500	
21	Bottom jet bumper	Special #5	Blu-Grn	1P19-8	5J3-2: 5J7-2	Q77	AE-23-800	
22	Backbox G.I. relay	Special #6	Blu-Blk	1P19-9	5J3-1: 5J7-1	Q79	5580-09555-01 [4b]	
	Flipper Circuits							
	Lower right flipper	Flipper	Orn-Vio	1P19-1	2J5-5: 2P10-7		FL11630/50VDC	
	Lower right flipper switch [2]	Switch	Blu-Vio		2J10-1: 2P8-15			
	Lower left flipper	Flipper	Orn-Gry	1P19-2	2J5-4: 2P10-8		FL11630/50VDC	
	Lower left flipper switch [2]	Switch	Blu-Gry		2J10-2: 2P8-14			
	Upper right flipper	Flipper	Blk-Blu		2J10-3: 2P8-15		FL11630/50VDC	
	Upper left flipper	Flipper	Blk-Yel					

Notes:
1. Wire colors, except flipper Orn-Vio and Orn-Gry, are ground connections (to coil terminal with unbanded end of diode). Flipper Org-Vio and Orn-Gry wires connect from CPU Board to flipper button switch on cabinet.
2. Flipper connections are from flipper button switch to flipper coil.
3. "A" circuits are pulsed, when Sol. 12 is de-energized; "C" circuits are pulsed, with Sol. 12 energized. Wire colors in brackets are those from respective A and C terminals corresponding to the J1-terminal connection listed for the Aux. Power Driver Board, which controls the device pulsing by Sol. 12.
4. Relay is mounted on Relay Board: (4a) p/n C-11998-1: (4b) C-11902-1.
5. Relay is mounted on Aux. Power Driver Board, D-12247, in the backbox.

LAMP MATRIX

Red ⟵ Yellow (B+)

Row \ Column	1 Yellow-Brown 1J7-1 Q66	2 Yellow-Red 1J7-2 Q64	3 Yellow-Orange 1J7-3 Q62	4 Yellow-Black 1J7-4 Q60	5 Yellow-Green 1J7-6 Q58	6 Yellow-Blue 1J7-7 Q56	7 Yellow-Violet 1J7-8 Q54	8 Yellow-Grey 1J7-9 Q52
1 Red-Brown 1J6-1 Q80	Shoot Again 1	Bonus 2X 9	Multi-Ball 17	Top Lanes Left 25	Left Return Lane 33	Black Hole 10K 41	Black Hole 90K 49	Insert Board 500K 57
2 Red-Black 1J6-2 Q81	Left Lock Status 2	Bonus 3X 10	Not Used 18	Top Lanes Middle 26	Right Return Lane 34	Black Hole 20K 42	Black Hole 100K 50	Insert Board 1 Million 58
3 Red-Orange 1J6-3 Q82	Right Lock Status 3	Bonus 4X 11	Left Drop Target "R" 19	Top Lanes Right 27	Right Spinner 35	Black Hole 30K 43	Black Hole 200K 51	Insert Board 1.5 Million 59
4 Red-Yellow 1J6-5 Q83	Center 50K 4	Bonus 5X 12	Left Drop Target "E" 20	"X" Target 28	Top Flipper 36	Black Hole 40K 44	Black Hole 300K 52	Insert Board 2 Million 60
5 Red-Green 1J6-6 Q84	Center 100K 5	Playfield 2X (2 lamps) 13	Left Drop Target "S" 21	Extra Ball 29	Super Bonus Bottom 37	Black Hole 50K 45	Black Hole 400K 53	Insert Board 2.5 Million 61
6 Red-Blue 1J6-7 Q85	Center 150K 6	Playfield 3X (2 lamps) 14	Middle Drop Target "C" 22	Left Kicker Lane 30	Super Bonus Middle 38	Black Hole 60K 46	Black Hole 500K 54	Insert Board 3 Million 62
7 Red-Violet 1J6-8 Q86	Center 200K 7	Lock 1 Now 15	Middle Drop Target "U" 23	Left Special 31	Super Bonus Top 39	Black Hole 70K 47	Black Hole 1 Million 55	Insert Board 3.5 Million 63
8 Red-Grey 1J6-9 Q87	Center 250K 8	Lock 2 Now 16	Middle Drop Target "E" 24	Right Special 32	X-cellerator Arrow (2 lamps) 40	Black Hole 80K 48	Not Used 56	Insert Board 4 Million 64

SWITCH MATRIX

White ⟶ Green

Row \ Column	1 Green-Brown 1J8-1 Q45	2 Green-Red 1J8-2 Q49	3 Green-Orange 1J8-3 Q44	4 Green-Yellow 1J8-4 Q48	5 Green-Black 1J8-5 Q43	6 Green-Blue 1J8-7 Q47	7 Green-Violet 1J8-8 Q42	8 Green-Grey 1J8-9 Q46
1 White-Brown 1J10-9	Plump Bob Tilt 1	Playfield Tilt 9	Top of Ramp 17	Top Lane Left "S" 25	Left (Orion) Lockup 33	Not Used 41	Not Used 49	Right Flipper 57
2 White-Red 1J10-8	A/C Relay C-Side 2	Outhole 10	Not Used 18	Top Lane Middle "O" 26	Right (Orion) Lockup 34	Not Used 42	Not Used 50	Left Flipper 58
3 White-Orange 1J10-7	Start Button 3	Ball Trough #1 (right) 11	Left Drop Target Bank "R" 19	Top Lane Right "S" 27	Spinner 35	Not Used 43	Not Used 51	Left Outlane 59
4 White-Yellow 1J10-6	Right Coin Switch 4	Ball Trough #2 (middle) 12	Left Drop Target Bank "E" 20	Not Used 28	Not Used 36	Not Used 44	Not Used 52	Left Jet Bumper 60
5 White-Green 1J10-5	Center Coin Switch 5	Ball Trough #3 (left) 13	Left Drop Target Bank "S" 21	Not Used 29	Left Return Lane 37	Not Used 45	Not Used 53	Right Jet Bumper 61
6 White-Blue 1J10-3	Left Coin Switch 6	Shooter Lane 14	Middle Drop Target Bank "C" 22	Jet Bumper 10 point 30	Not Used 38	Not Used 46	Not Used 54	Bottom Jet Bumper 62
7 White-Violet 1J10-2	Slam Tilt 7	Ball Popper 15	Middle Drop Target Bank "U" 23	Transport 31	Right Return Lane 39	Not Used 47	Not Used 55	Left Slingshot 63
8 White-Grey 1J10-1	High Score Reset 8	X-cellerator Standup Target 16	Middle Drop Target Bank "E" 24	Not Used 32	Right Outlane 40	Not Used 48	Not Used 56	Right Slingshot 64

Please note that the manual has errors which have been corrected in this Tech Chart.
If you find any other errors which I overlooked, please let me know, www.inkochnito.nl

www.inkochnito.nl