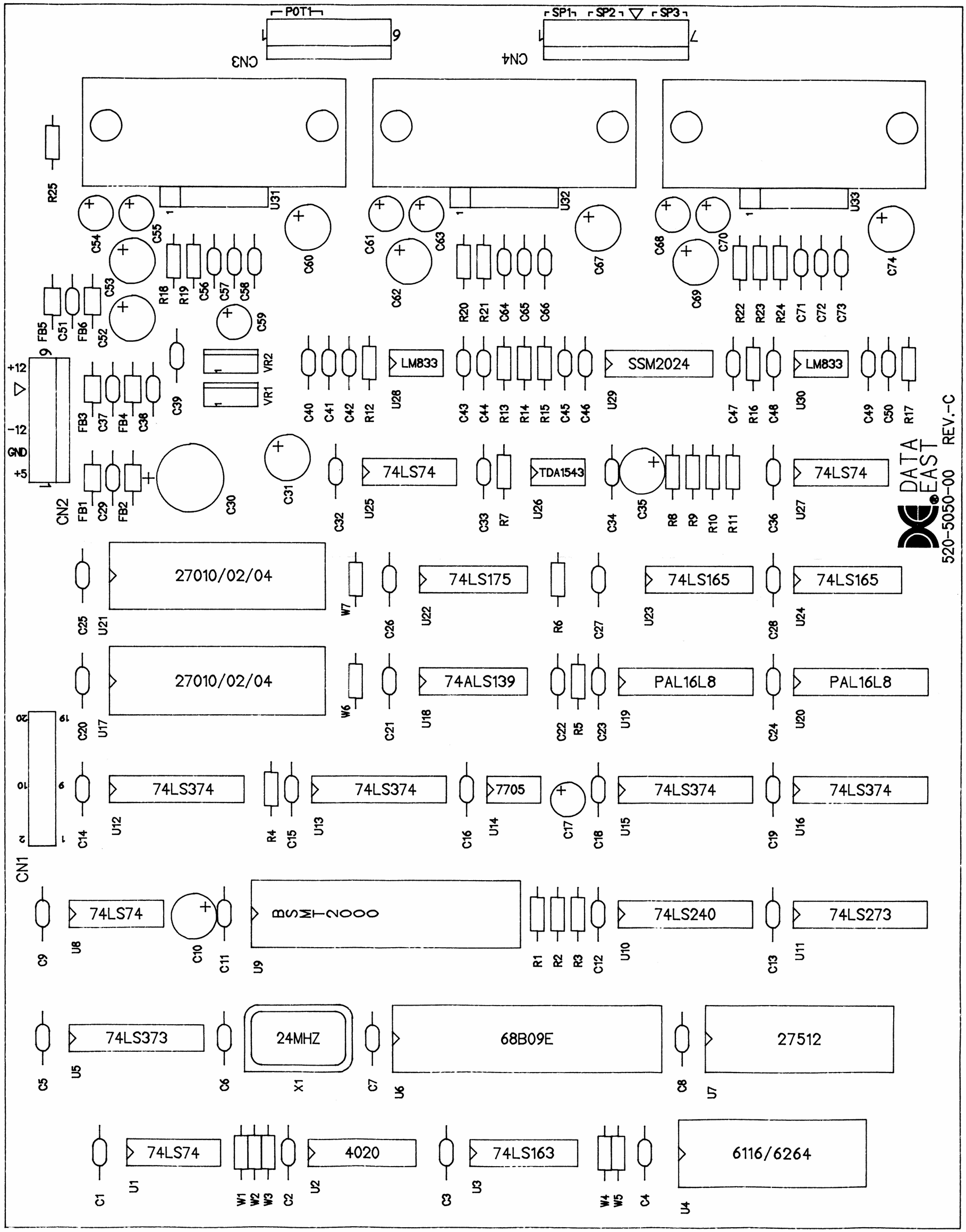
CN1
CN2
CN3
CN4
POT1
SP1
SP2
SP3
+12
-12
GND
+5
R25
U31
U32
U33
LM833
SSM2024
LM833
74LS74
TDA1543
74LS74
27010/02/04
74LS175
74LS165
74LS165
27010/02/04
74ALS139
PAL16L8
PAL16L8
74LS374
74LS374
7705
74LS374
74LS374
74LS74
BSMI-2000
74LS240
74LS273
74LS373
24MHZ
68B09E
27512
74LS74
4020
74LS163
6116/6264
DATA EAST
520-5050-00
REV.-C

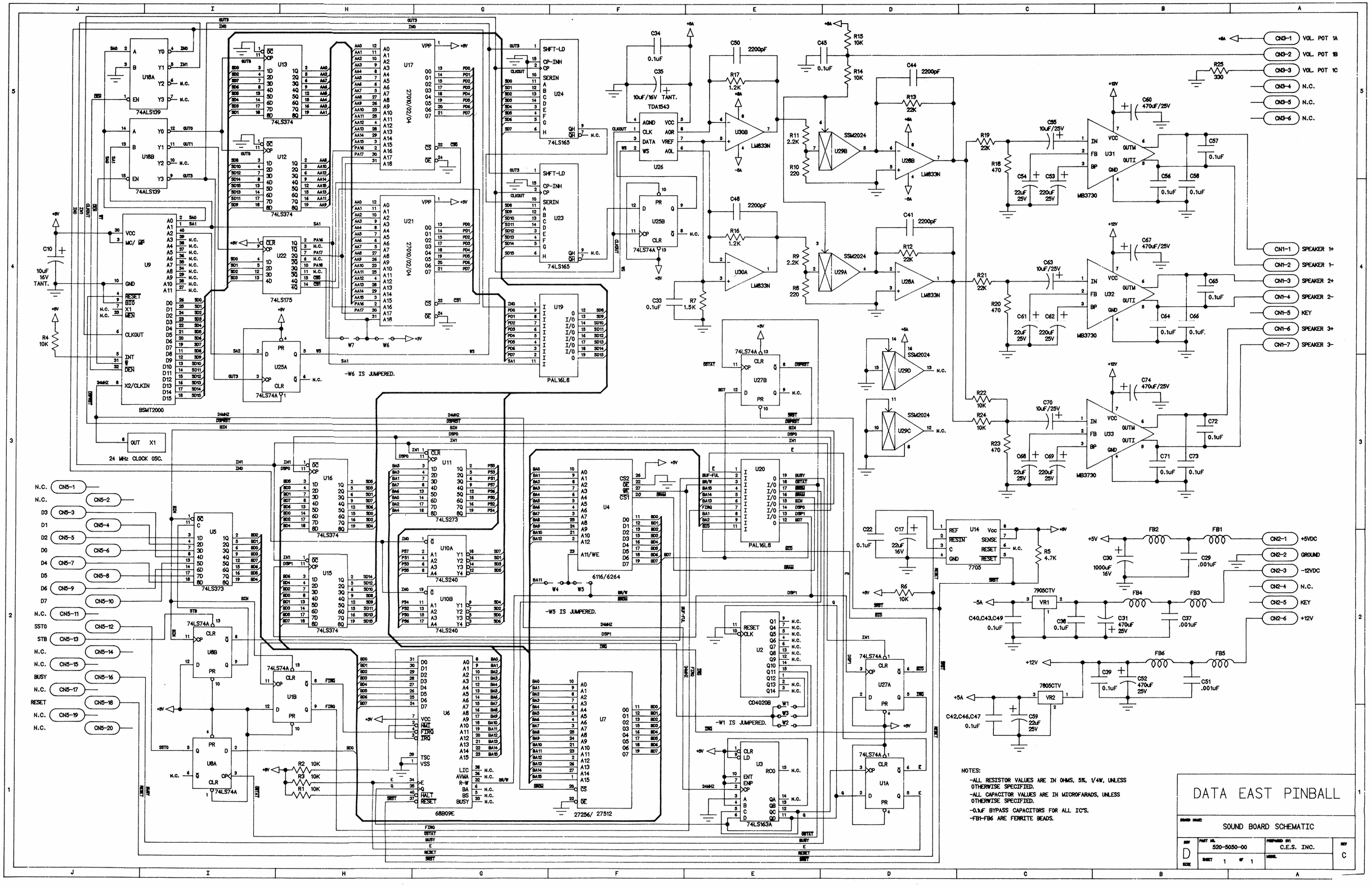

NOTES:

-ALL RESISTOR VALUES ARE IN OHMS, 5%, 1/4W, UNLESS OTHERWISE SPECIFIED.

-ALL CAPACITOR VALUES ARE IN MICROFARADS, UNLESS OTHERWISE SPECIFIED.

-0.1uF BYPASS CAPACITORS FOR ALL IC'S.

-FB1-FB6 ARE FERRITE BEADS.

DATA EAST PINBALL

BOARD NAME: SOUND BOARD SCHEMATIC

REV	PART NO.	PREPARED BY:	REV
D	520-5050-00	C.E.S. INC.	C
SIZE	SHEET 1 OF 1	MODEL	