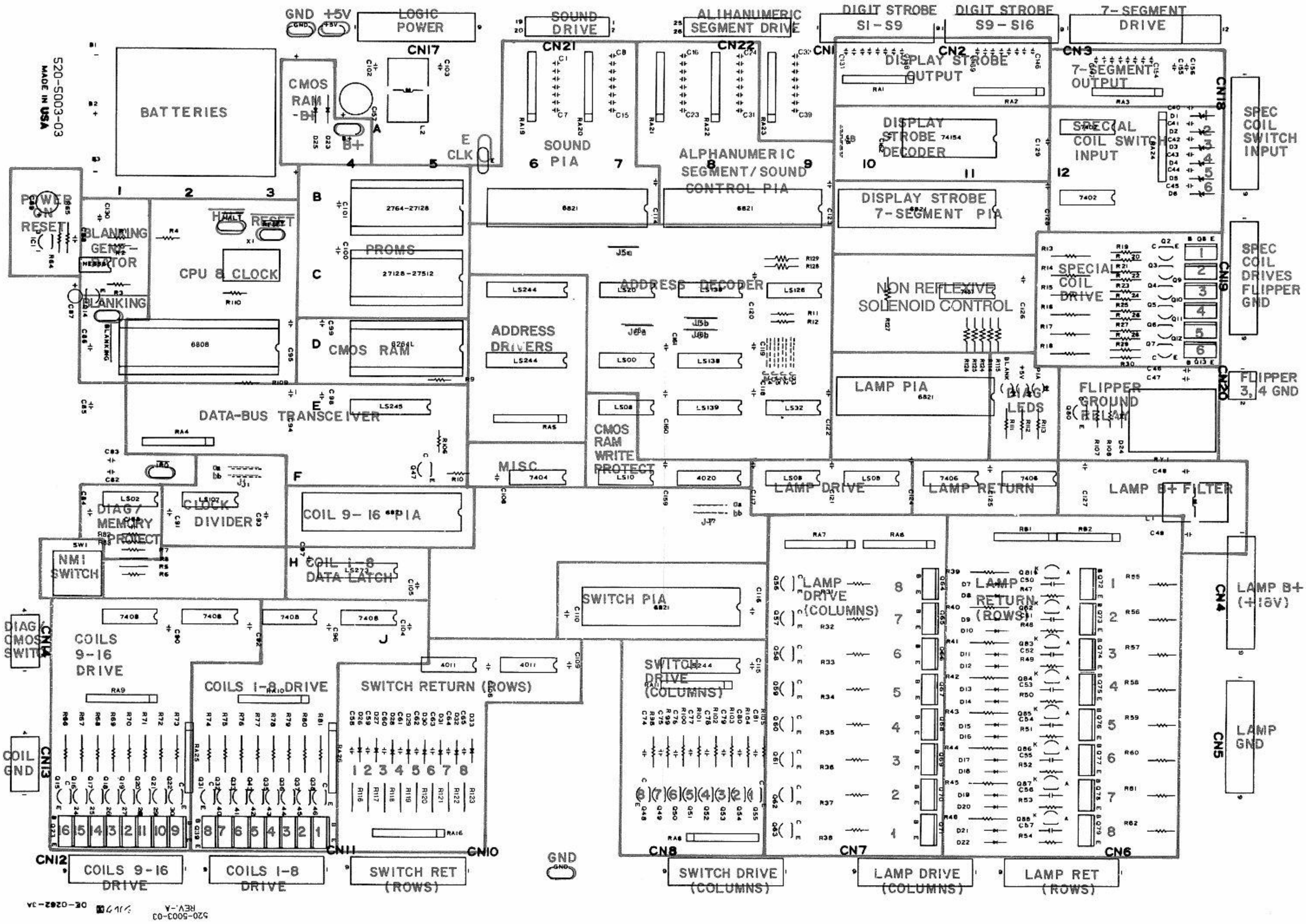
520-5003-03
MADE IN USA
GND
+5V
LOGIC POWER
CN17
BATTERIES
CMOS RAM -B+
B+
SOUND DRIVE
CN21
SOUND PIA
ALPHANUMERIC SEGMENT DRIVE
CN22
ALPHANUMERIC SEGMENT/SOUND CONTROL PIA
DIGIT STROBE S1-S9
DIGIT STROBE S9-S16
7-SEGMENT DRIVE
CN1
CN2
CN3
DISPLAY STROBE OUTPUT
7-SEGMENT OUTPUT
DISPLAY STROBE DECODER
SPECIAL COIL SWITCH INPUT
CN18
SPEC COIL SWITCH INPUT
DISPLAY STROBE 7-SEGMENT PIA
POWER ON RESET
BLANKING GENERATOR
HALT
RESET
CPU & CLOCK
PROMS
2764-27128
27128-27512
SPECIAL COIL DRIVE
CN19
SPEC COIL DRIVES FLIPPER GND
NON REFLEXIVE SOLENOID CONTROL
BLANKING
6808
CMOS RAM
6264L
ADDRESS DRIVERS
ADDRESS DECODER
LAMP PIA
DIAG LEDS
FLIPPER GROUND (BLANK)
CN20
FLIPPER 3, 4 GND
DATA-BUS TRANSCEIVER
CMOS RAM WRITE PROTECT
MISC.
LAMP DRIVE
LAMP RETURN
LAMP B+ FILTER
DIAG/ MEMORY PROTECT
CLOCK DIVIDER
COIL 9-16 PIA
NMI SWITCH
COIL 1-8 DATA LATCH
SWITCH PIA
LAMP DRIVE (COLUMNS)
LAMP RETURN (ROWS)
CN4
LAMP B+ (+18V)
DIAG CMOS SWITCH
CN14
COILS 9-16 DRIVE
COILS 1-8 DRIVE
SWITCH RETURN (ROWS)
SWITCH DRIVE (COLUMNS)
CN5
LAMP GND
COIL GND
CN13
CN12
CN11
CN10
CN8
CN7
CN6
COILS 9-16 DRIVE
COILS 1-8 DRIVE
SWITCH RET (ROWS)
GND
SWITCH DRIVE (COLUMNS)
LAMP DRIVE (COLUMNS)
LAMP RET (ROWS)
520-5003-03 REV.-A
OE-0262-3A

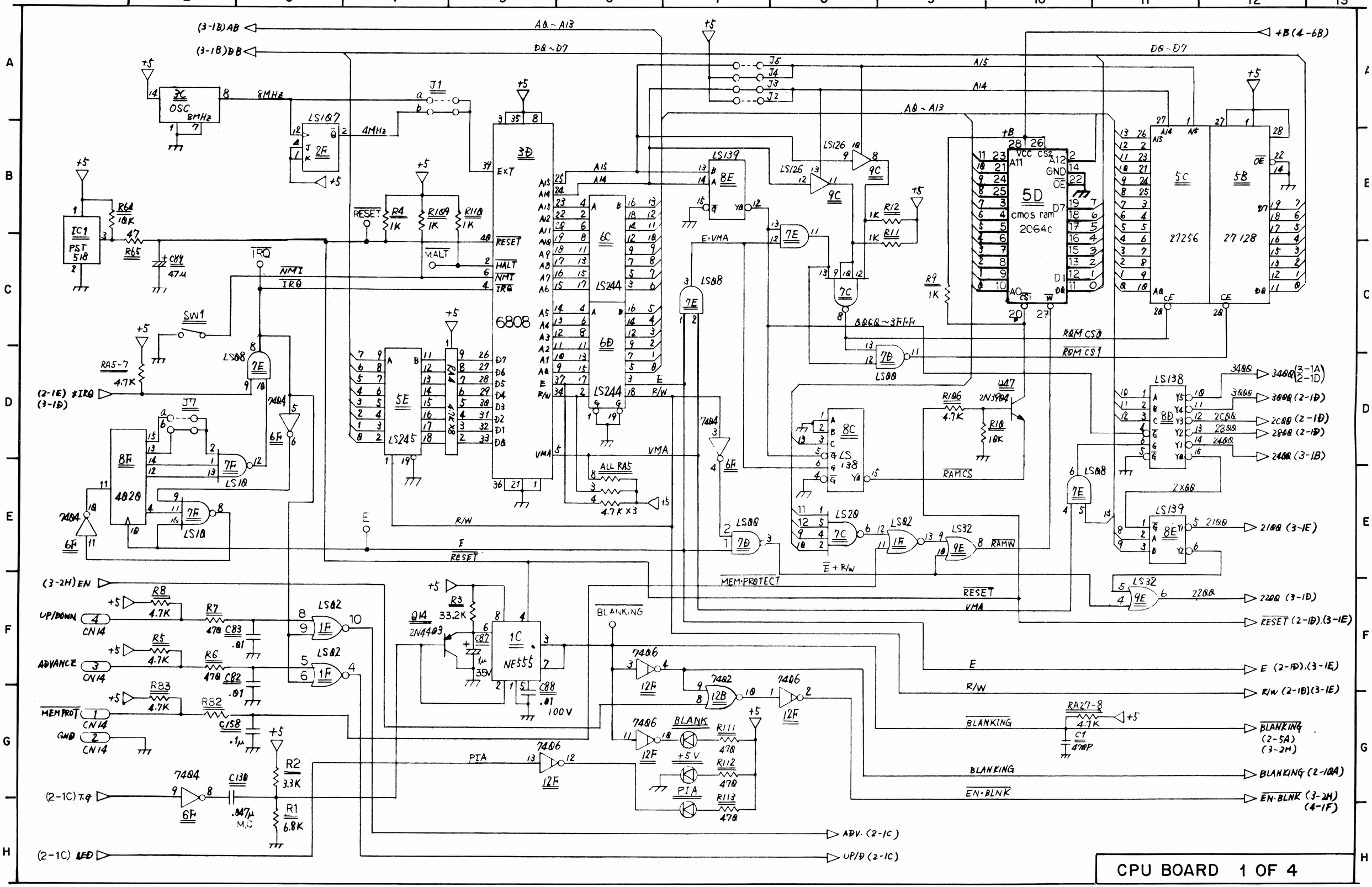

CPU Board Logic Diagram (Sheet 1 of 4)

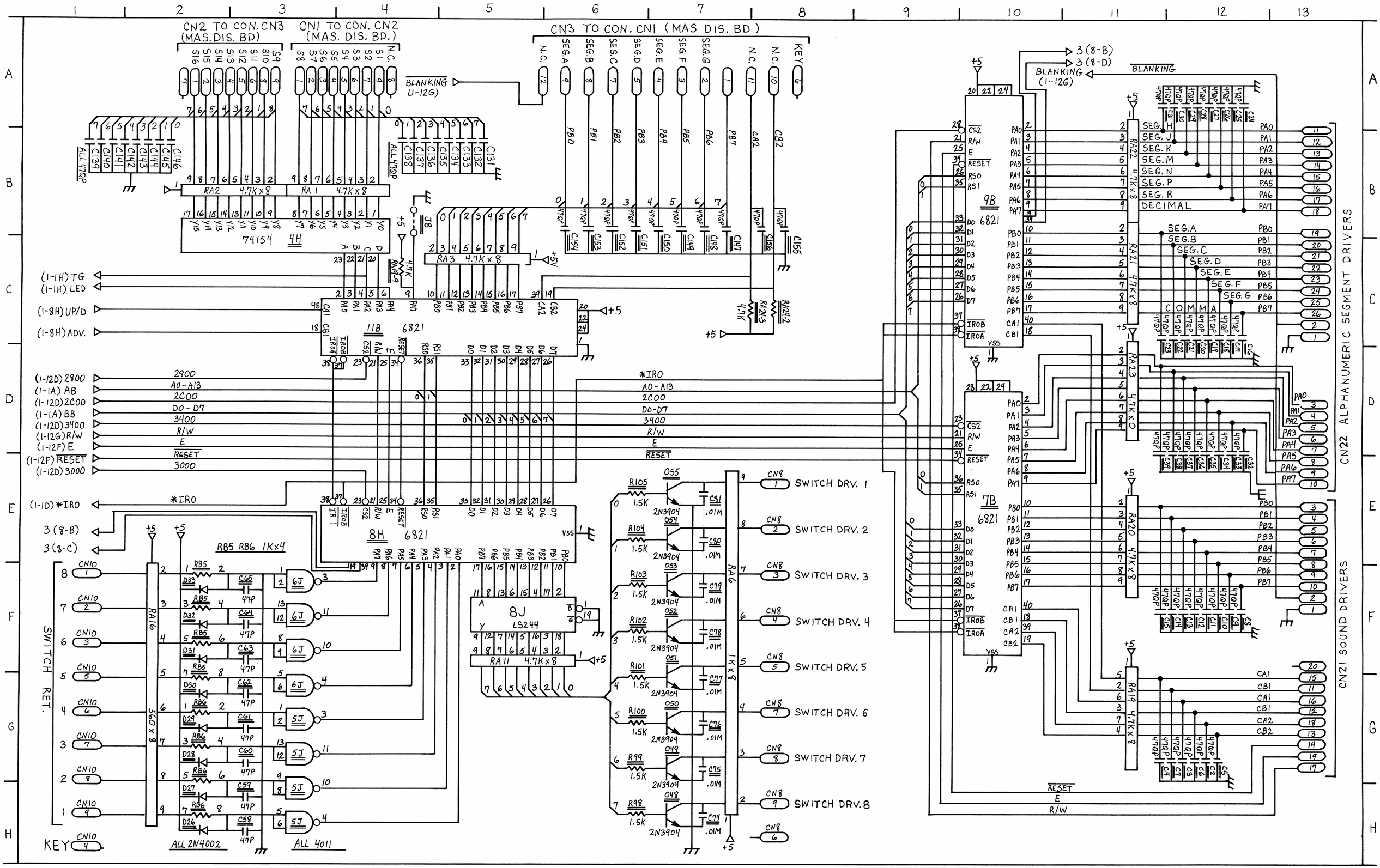

CPU Board Logic Diagram (Sheet 2 of 4)

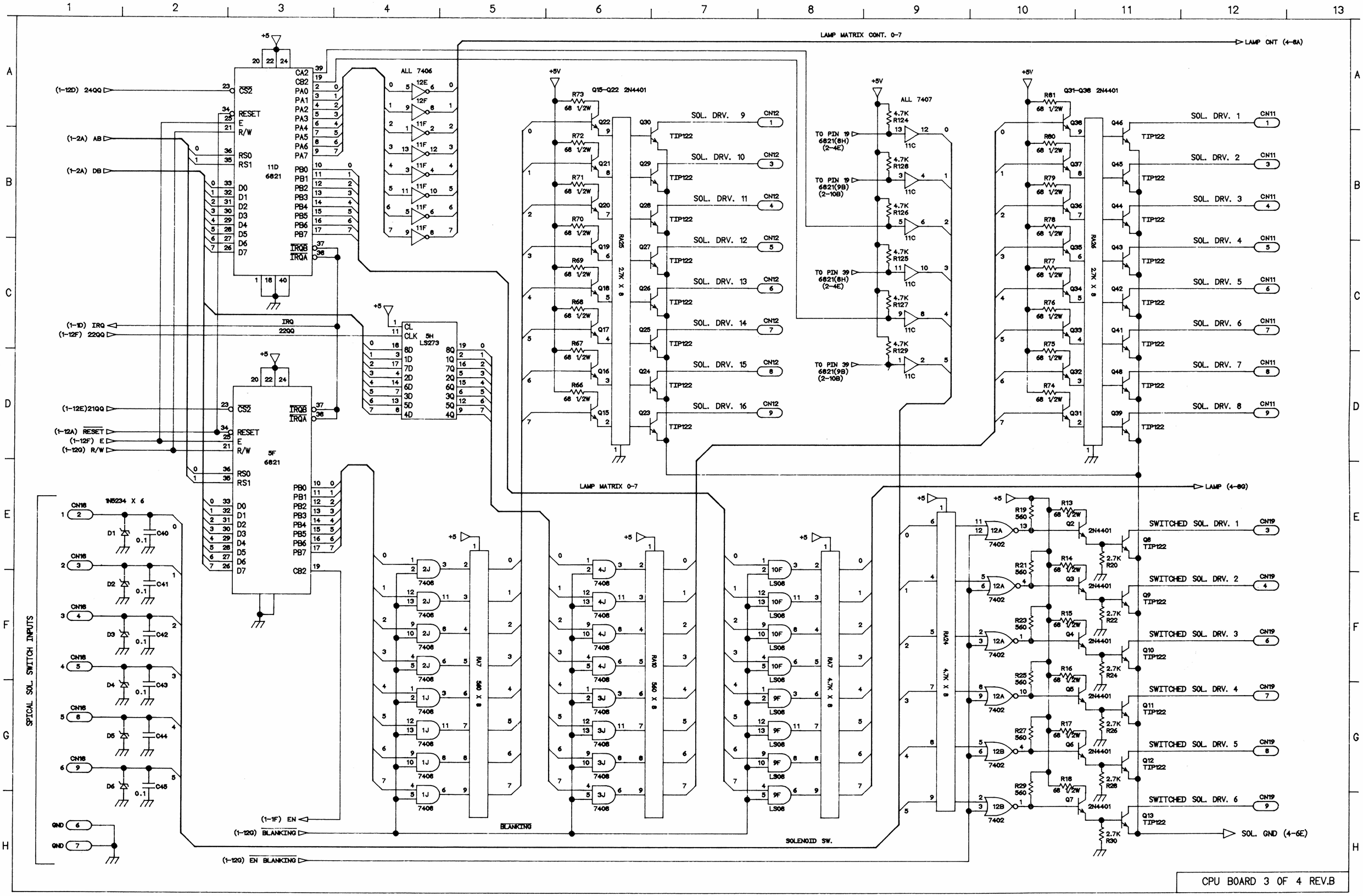

CPU Board Logic Diagram (Sheet 3 of 4)

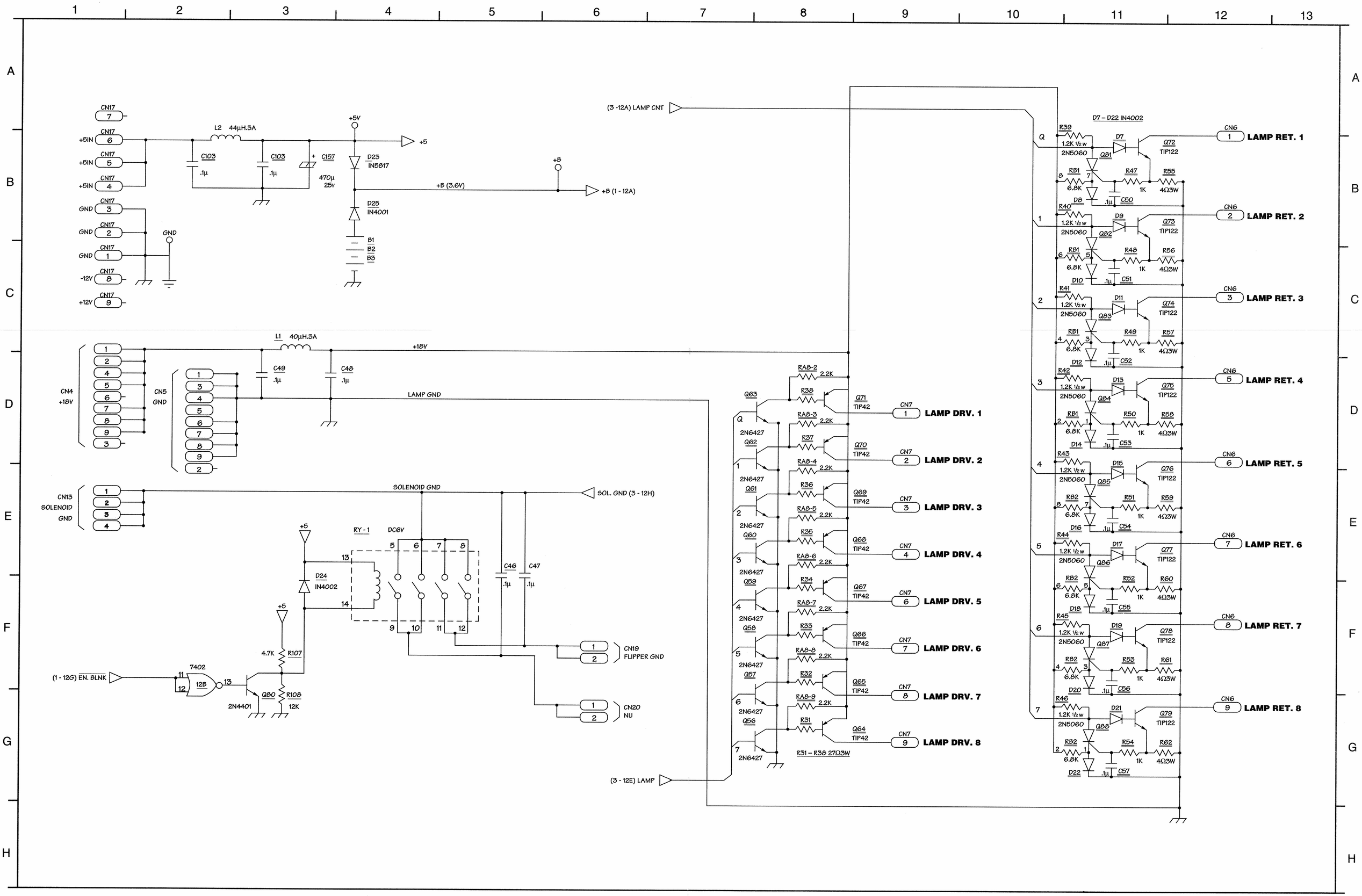

CPU Board Logic Diagram (Sheet 4 of 4)